REQUIRED BOARDING ARRANGEMENTS FOR PILOT

IMO INTERNATIONAL MARITIME ORGANIZATION

In accordance with SOLAS Regulation V/23 & IMO Resolution A.1045(27)

INTERNATIONAL MARITIME PILOTS' ASSOCIATION

H.Q.S. "Wellington" Temple Stairs, Victoria Embankment, London WC2R 2PN Tel: +44 (0)20 7240 3973 Fax: +44 (0)20 7210 3518 Email: office@impahq.org

This document and all IMO Pilot-related documents are available for download at: http://www.impahq.org

RIGGING FOR FREEBOARDS OF 9 METRES OR LESS

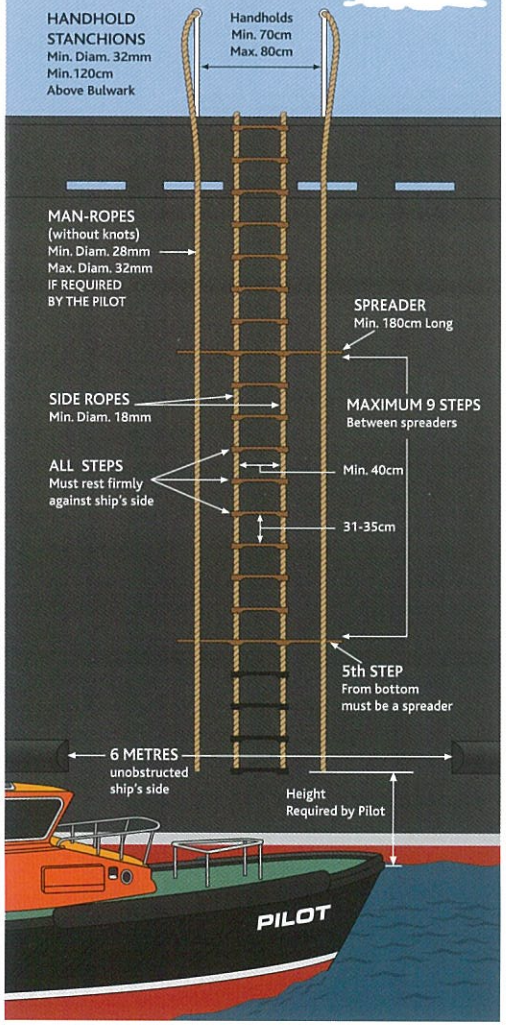

COMBINATION ARRANGEMENT FOR SHIPS WITH A FREEBOARD OF MORE THAN 9 METRES

WHEN NO SIDE DOOR AVAILABLE

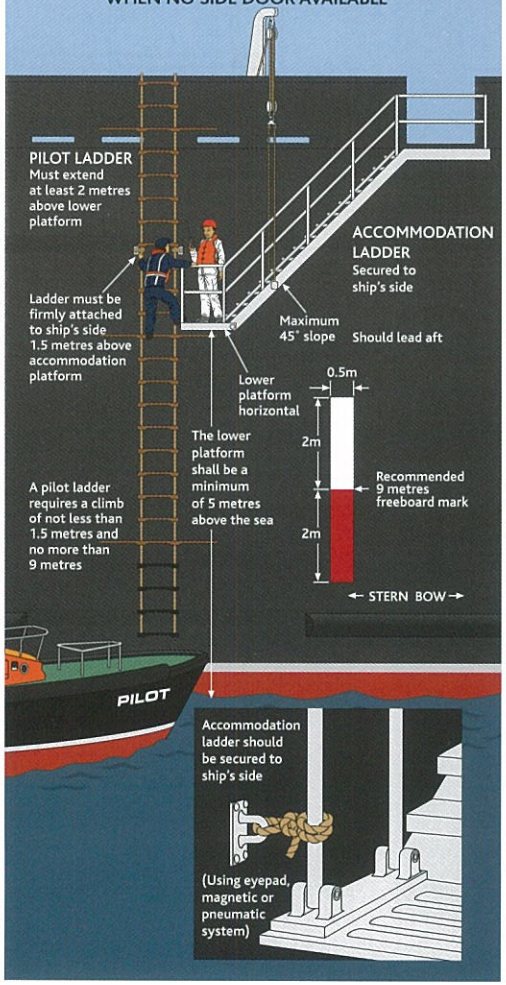

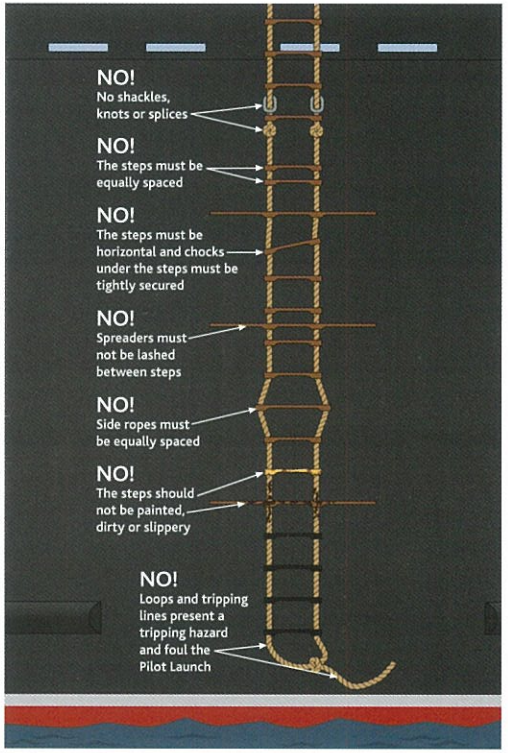

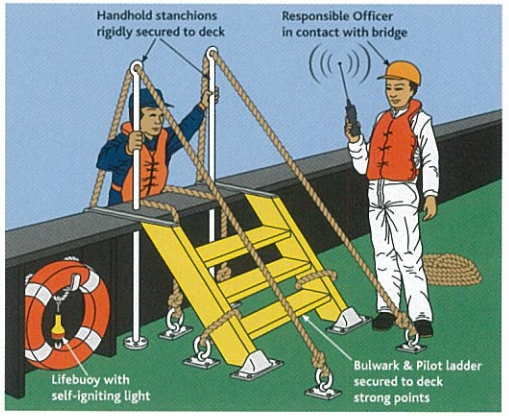

A

PILOT LADDER WINCH REEL

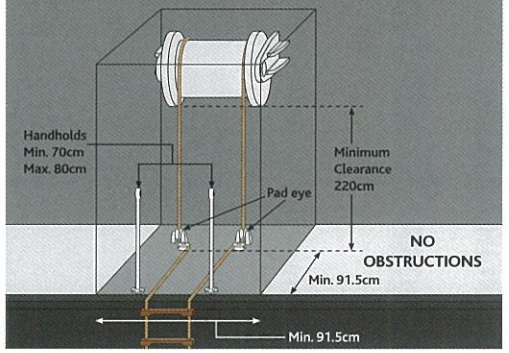

B

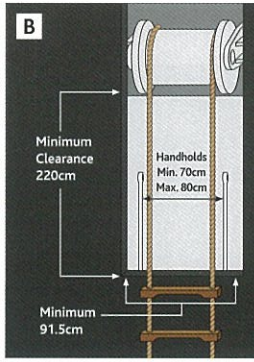

All pilot ladder winch reels should have a means of prevention from being accidentally operated.

The brake and lock must be operative on manually operated winches.

Power winches must have an operative safety device to lock the winch in position.

C

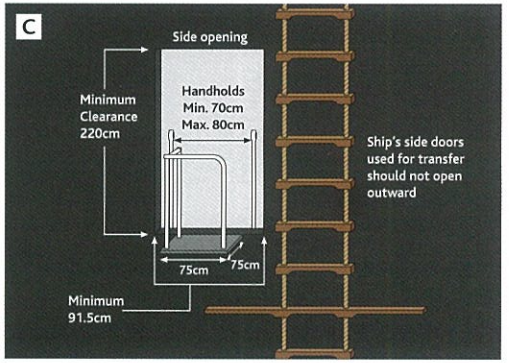

Ship's side doors used for transfer should not open outward